MSQ Series Rotary Table,Rack & Pinion Cylinder

Overall Dimensions

Basic style:MAQB□A

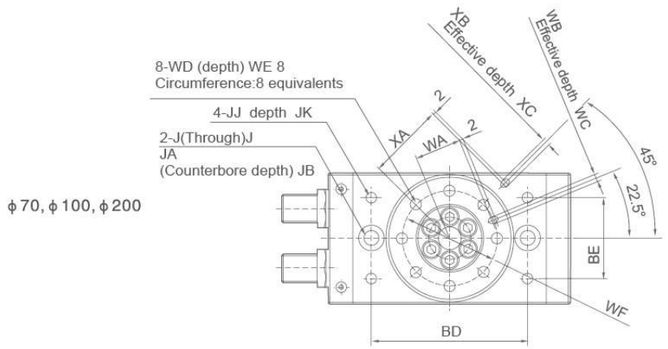

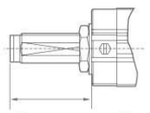

Bore Size (mm)	FU
70	55.4
100	55.5
200	74.7

With shock absorber MAQB□R

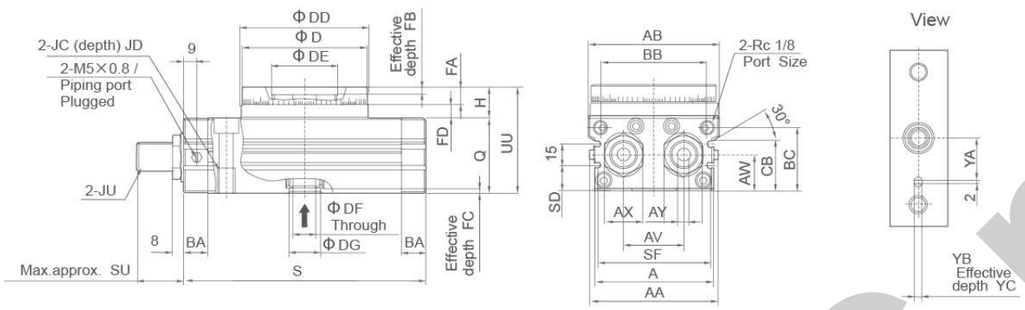

Dimension Sheet

Bore size(mm)	AA	AB	A	AV	AW	AX	AY	BA	BB	BC	BD	BE	CB	D	DD	DE
70	90	92	84	42	25.5	27	8	17	75	44.5	110	57	36	88h9	90h9	46H9
100	101	102	95	50	29.5	27	8	17	85	50.5	130	66	42	98h9	100h9	56H9
200	119	120	113	60	36.5	36	10	24	103	65.5	150	80	57	116h9	118h9	64H9

Bore size(mm)	DF	DG	FA	FB	FC	FD	H	J	JA	JB	JC	JD	JJ	JK	JU
70	16	22H9	12.5	5	3.5	6	22	10.4	17.5	10.5	M12×1.75	18	M8×1.25	10	M20×1.5
100	19	24H9	14.5	6	3.5	12	27	10.4	17.5	10.5	M12×1.75	18	M8×1.25	10	M20×1.5
200	24	32H9	16.5	9	5.5	15	32	14.2	20	12.5	M16×2	25	M12×1.75	13	M27×1.5

Bore size(mm)	Q	S	SD	SF	SU	UU	WA	WB	WC	WD	WE	WF	XA	XB	XC	YA	YB	YC
70	53	170	18	79	34.2	75	32.5	5H9	5.5	M8×1.25	12.5	67	54	5H9	3.5	39	5H9	3.5
100	59	189	22	90	34.3	86	37.5	6H9	6.5	M10×1.55	14.5	77	59	6H9	4.5	49	6H9	4.5
200	74	240	29	108	40.2	106	44	8H9	8.5	M12×1.75	16.5	90	69	8H9	4.5	54	8H9	6.5

CRQ2 Series Rotary Actuator (Pin Type)

CRQ2BS20–180

Ordering Code

CRQ2B	S	20	□	–	90	□
Series Code	Shaft Type	Cylinder Bore	Port Type		Rotating Angle	Cushion
CRQ2B: Normal Type CDRQ2B: Attach Magnet Type	S: Single Shaft D: Double Shaft	10mm-40mm	Blank: M5X0.8 (Φ10, Φ15) Blank: Rc1/8 (Φ20-Φ40) G: G1/8 (Φ20-Φ40) N: NPT1/8 (Φ20-Φ40) NF: NPTF1/8 (Φ20-Φ40)		90: 80°-100° 180: 170°-190°	Blank: Without (Φ20-Φ40) Blank: Rubber (Φ10,Φ15) C: Air Cushion (Φ20-Φ40)

Specifcation

Bore(mm)		10	15	20	30	40
Working Medium		Air(to be filtered bu 40μm filter element)				
Action Type		Double-acting				
Operating Pressure Range(Mpa)		0.15~0.7		0.1~1.0		
Environment and Fliud Temperature		0~60℃				
Cushion Type		Rubber cushion		None/air cushion(optional)		
Rotating Angle		80°~100°, 170°~190°				
Adjustable Angle Range		±5°				
Output Torque N		0.3	0.75	1.8	3.1	5.3
Allowable Kinetic Energy	No Cushion	-	-	0.025	0.048	0.081
	Rubber Cushion	0.25×10^{3}	0.39×10^{3}	-	-	-
	Air Cushion	-	-	0.12	0.25	0.40
Rotating Time Range(Sec/90°)		0.2~0.7		0.2~1.0		

CRA1 Series Rotary Actuator(Rack &pinion type)

CDRA1BS30–90

Ordering Code

CRA1	B	W	□	50	–	90	□
Series Code	Mounting Type	Shaft Type	Type	Cylinder Bore		Rotation Angle	Cushion
CRA1: Normal Type CDRA1: Attach Magnet Type	B: Basic Type L: Foot Type F: Flange Type (Not available for Φ30)	S: Single Shaft(Not available for Φ30) W: Double Shaft (Customized available)	Blank: Pneumatic H: Air-hydro(Not available for Φ30)	30mm-100mm		90: 90° 180: 180° (100° and 190° available)	Blank: Without C: Air Cushion (Not available for Φ30)

Specifcation

Bore(mm)		30	50	63	80	100
Working Medium		Air(to be filtered by 40μm filter element)				
Action Type		Double-acting				
Max.operating Pressure		1.0MPa				
Min.operating Pressure		0.1MPa				
Environment and Fluid Temperature		0~60℃ (No frezzing)				
Backlash		Within 1°(For Φ30, no backlash due to the installed stopper under pressure)				
Tolerance in Rotating Angle		+4° 0				
Lubrication		Not required(Not-lube)				
Output Torque(N·m)		1.9	9.3	17	32	74
Allowable Kinetic Energy	No Air Cushion	0.01	0.05	0.12	0.16	0.54
	Air Cushion	-	0.98	1.2	2.0	2.9
Rotation Time Range(Sec/90°)		0.2~1	0.2~2	0.2~3	0.2~4	0.2~5
Port Size Rc		M5×0.8	Rc1/8	Rc1/8	Rc1/4	Rc3/8

XCPC pneumatic